Your Peace of Mind is Our Top Priority®

Product information presented here reflects conditions at time of publication. Consult factory regarding discrepancies or inconsistencies.

ZOELLER®
PUMP COMPANY
Zoeller Family of Water Solutions™

MAIL TO: *P.O. BOX 16347 • Louisville, KY 40256-0347*
SHIP TO: *3649 Cane Run Road • Louisville, KY 40211-1961*
(502) 778-2731 • 1 (800) 928-PUMP • FAX (502) 774-3624

SECTION: 2.40.015
FM1745
1014
Supersedes
1213

visit our web site: www.zoeller.com

COMPARE THESE FEATURES

- FM listed motor for Class I, Division 1, Group C & D environments
- ⚠ WARNING Not for use in acidic, methanol, or ethyl acetate atmospheres
- Non-clogging cast iron vortex impeller design
- Operation: Automatic or nonautomatic. Automatic units Patent No. 8,535,014
- Stainless steel rotor shaft
- Durable cast construction. Cast iron cover, motor adapter and pump housing. No sheet metal parts to rust or corrode. All cast iron class 30, 30000# tensile strength
- Stainless steel bolts, handle, guard and float rod guide, switch arm and actuator assembly
- Brass float and float rod (automatic only)
- 20 ft. UL Listed 5-wire (1 Ph) or 8-wire (3 Ph) neoprene cord. Extra cord lengths available in 25'-35'-50' length only. Sensor leads & power leads in one cord for easy installation.
- Threaded conduit connection for protecting cords in extra heavy duty applications: 1-1/2" NPT
- Moisture sensors prewired in motor housing (functionality requires indicator circuit in panel)
- Zoeller control panel with intrinsically safe relays and moisture indicator is required with nonautomatic units.
- Simplex seal-fail panel #10-1031 available for automatic units
- 3 phase models available as nonautomatic only
- Motor - 60 Hz, 3450 RPM, oil-filled, hermetically sealed, automatic reset thermal overload protected (3 Ph requires circuit in control panel)
- Maximum temperature for sewage or dewatering 104°F (40°C)
- Shaft seal - stainless steel wetted parts, carbon and ceramic rotary face seal
- Upper ball bearing and lower ball bearing running in bath of oil
- Neoprene square ring seals used throughout.
- All models pass 3/4" spherical solids.
- Major width 13-5/16". Height: 23-17/32" (Nonauto) and 24-15/16" (Auto)
- On point 19-3/4"; off point 10" for automatic model
- When ordering, specify 2" or 3" NPT female flanged vertical discharge
- 100% computerized testing and 100% tested submerged in water
- Corrosion-resistant powder coated epoxy finish

NOTE: The sizing of sewage systems normally requires variable level float(s) controls and properly sized basins to achieve required pumping cycles.

X161 - X163 - X165

(For Pump Prefix Identification see News & Views 0052)

HIGH HEAD
EXPLOSION-PROOF
SUBMERSIBLE
EFFLUENT
OR DEWATERING PUMP
1½" NPT DISCHARGE STANDARD
2" AND 3" NPT FLANGE AVAILABLE

SSPMA Certified 50 YEARS

DESIGNED • MACHINED • ASSEMBLED IN THE USA

FM* APPROVED
Standard 3600 & 3615

Certified to CSA Standard C22.2 No. 145

Product may not be exactly as pictured.

Automatic Model**
Patent No. 8,535,014

POWDER COATED TOUGH™

Nonautomatic Models for variable level systems

*See back page For FM Listing.
**Use optional model 10-1031 seal failure panel to enable moisture sensor circuit on automatic pump models.

© Copyright 2014 Zoeller® Co. All rights reserved.

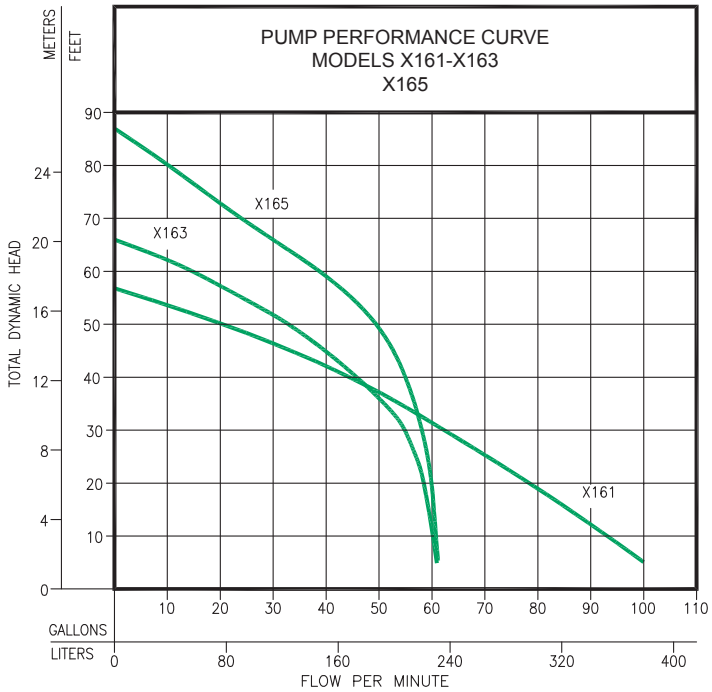

009920

MODELS		X161		X163		X165	
Feet	Meters	Gal.	Liters	Gal.	Liters	Gal.	Liters
5	1.5	100	379	61	231	61	231
10	3.0	93	352	60	227	60.5	229
15	4.6	86	326	60	227	60.3	228
20	6.1	79	299	59	223	60	227
25	7.6	71	267	57	216	59	223
30	9.1	62	235	55	208	58	220
40	12.2	45	170	46	174	55	208
50	15.2	20	76	33	125	50	189
60	18.3	--	--	15	57	39	148
70	21.3	--	--	--	--	22.5	85
80	24.4	--	--	--	--	10	38
Shut-off Head:		56 ft. (17.1m)		66 ft. (20.1m)		86.5 ft. (26.4m)	

009920

Automatic Model

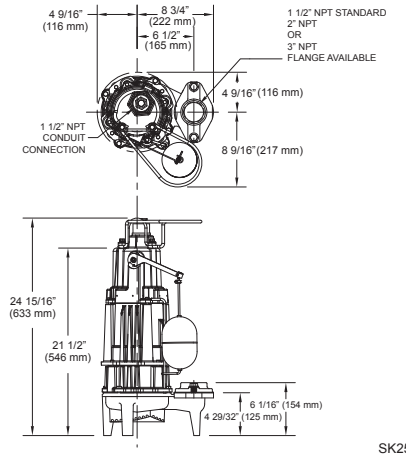

SK2506

Nonautomatic Model

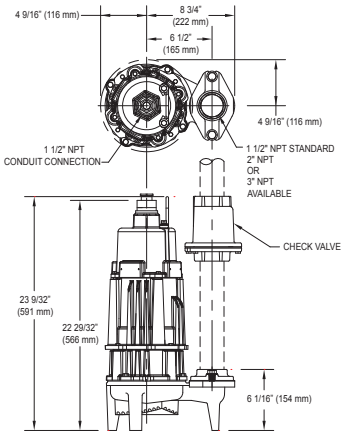

SK1912

Standard all models - 20 ft. cord - 1/2 HP

161 MODELS	Control Selection						Listing	
Single Seal	Volts -	Ph	Mode	Amps	Simplex	Duplex	FM	CSA
MX161	115	1	Auto	15.5	4 & 5	---	Y	Y
NX161	115	1	Non	15.5	1 & 3	1 & 3 or 2	Y	Y
DX161	230	1	Auto	7.5	4 & 5	---	Y	Y
EX161	230	1	Non	7.5	1 & 3	1 & 3 or 2	Y	Y
HX161	200	1	Auto	8.8	4 & 5	---	Y	Y
IX161	200	1	Non	8.8	1 & 3	1 & 3 or 2	Y	Y
JX161	200	3	Non	6.4	1 & 3	1 & 3	Y	Y
FX161	230	3	Non	5.2	1 & 3	1 & 3	Y	Y
GX161	460	3	Non	2.9	1 & 3	1 & 3	Y	Y
BAX161	575	3	Non	2.4	1 & 3	1 & 3	Y	Y

Standard all models - 20 ft. cord - 1/2 HP

163 MODELS	Control Selection						Listing	
Single Seal	Volts -	Ph	Mode	Amps	Simplex	Duplex	FM	CSA
MX163	115	1	Auto	15.0	4 & 5	---	Y	Y
NX163	115	1	Non	15.0	1 & 3	1 & 3 or 2	Y	Y
DX163	230	1	Auto	7.5	4 & 5	---	Y	Y
EX163	230	1	Non	7.5	1 & 3	1 & 3 or 2	Y	Y
HX163	200	1	Auto	8.5	4 & 5	---	Y	Y
IX163	200	1	Non	8.5	1 & 3	1 & 3 or 2	Y	Y
JX163	200	3	Non	6.0	1 & 3	1 & 3	Y	Y
FX163	230	3	Non	4.8	1 & 3	1 & 3	Y	Y
GX163	460	3	Non	2.9	1 & 3	1 & 3	Y	Y
BAX163	575	3	Non	2.4	1 & 3	1 & 3	Y	Y

Standard all models - 20 ft. cord - 1 HP

165 MODELS	Control Selection						Listing	
Single Seal	Volts -	Ph	Mode	Amps	Simplex	Duplex	FM	CSA
DX165	230	1	Auto	10.2	4 & 5	---	Y	Y
EX165	230	1	Non	10.2	1 & 3	1 & 3 or 2	Y	Y
HX165	200	1	Auto	12.6	4 & 5	---	Y	Y
IX165	200	1	Non	12.6	1 & 3	1 & 3 or 2	Y	Y
JX165	200	3	Non	7.5	1 & 3	1 & 3	Y	Y
FX165	230	3	Non	7.4	1 & 3	1 & 3	Y	Y
GX165	460	3	Non	3.7	1 & 3	1 & 3	Y	Y
BAX165	575	3	Non	3.0	1 & 3	1 & 3	Y	Y

SELECTION GUIDE

1. See FM1705 for correct intrinsically safe simplex or duplex panel
2. Mechanical alternator M-Pak 10-0076 or 10-0077 (See FM0495)
3. Variable level control switch used as a control activator. Quantity required dependent upon panel selection
4. Integral float operated mechanical switch; no external control required
5. Automatic pumps: Use the optional seal-failure panel (10-1031) to enable the moisture sensor circuit if required by local codes

For information on additional Zoeller products refer to catalog on Variable level control switch, FM0526; Duplex and Simplex controls, FM1705; Mechanical Alternator, FM0495; Sump/Sewage Basins, FM0487; and Rail Systems, FM0787.

⚠ CAUTION All installation of controls, protection devices and wiring should be done by a qualified licensed electrician. All electrical and safety codes should be followed including the most recent National Electrical Code (NEC) and the Occupational Safety and Health Act (OSHA).

RESERVE POWERED DESIGN

For unusual conditions a reserve safety factor is engineered into the design of every Zoeller pump.

© Copyright 2014 Zoeller® Co. All rights reserved.